Wall Cabinet Assembly Instruction
(Item:W0930-W1530 W0936-1536)

Hardware list	1	4pcs	Ø4x16mm	2	2pcs	Ø4x19mm	3	8pcs	Ø3.5x16mm	4	16pcs	Ø3.5x16mm	5	2pcs	Ø3.5x35mm	6	2pcs	1-1/4"
	Flat head screw			Round head screw			Color galvanized screw with flat head			Color galvanized screw with flat head			Black screw with flat head			Hinge		
																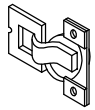		
Assembly tools required	Screw driver			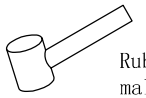 Rubber mallet									10	4pcs	40mmx40mm	9	2pcs	Ø7
													Bracket rainbow 90°			Bumper		
													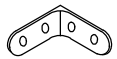					
Cabinet Part List	A	Front frame		B	Side panel(2)		C	Top-Bottom panel		D	Back panel		E	Adjustable shelf		F	Door	

7	8pcs	6mm	8	2set				
Shelf clips			L-shape bracket					
			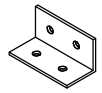					

Step 1 : With front frame (A) of cabinet lay down on clean and soft surface then put glue into groove.

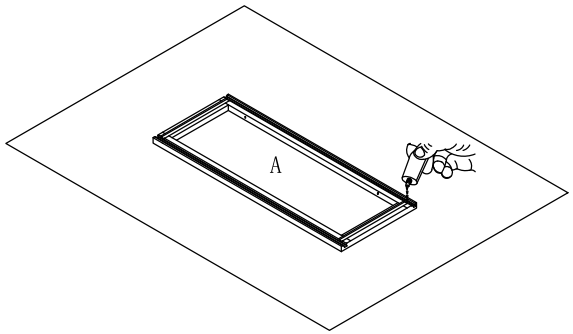

Step 2 : Install side panel. Insert two side panels (B) into groove of front frame (A) until side panel (B) and front frame (A) even.

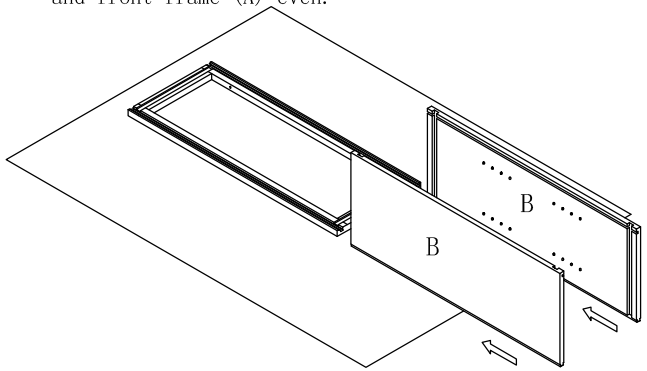

Step 3 : Install top and bottom panel. Insert top and bottom panel (C) into groove of side panel (B) until it into the groove of front frame (A).

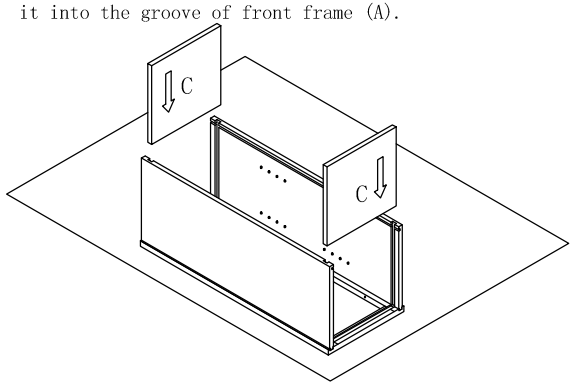

Step 4 : Install back panel. Insert back panel (D) into groove of left and right side panel (B) and screw L-shape bracket to the frame and top&bottom panel.

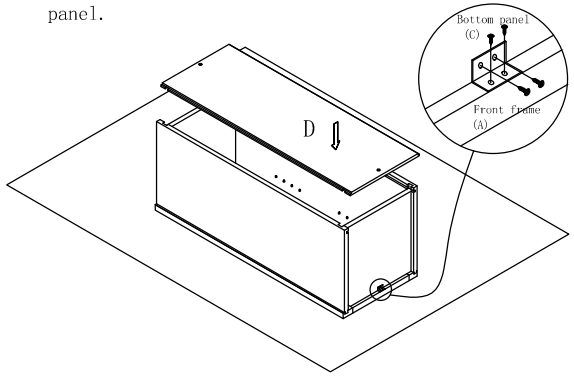

Step 5 : Screw rainbow bracket into front frame(A) and side panel(B).

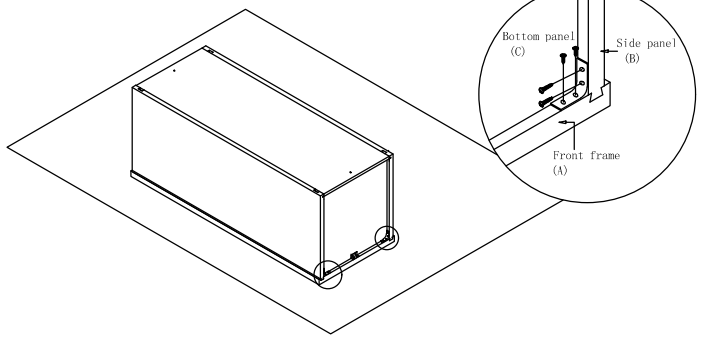

Step 6 : Install screw(5)Ø3.5x35mm into back panel (D),then nails side panel(B) and back panel(C) using nail gun.

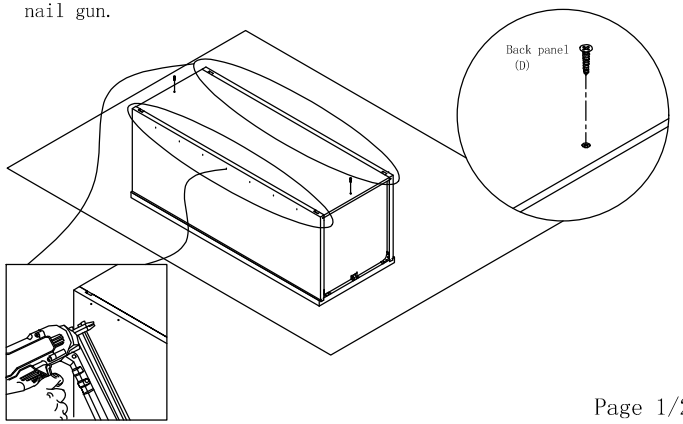

Wall Cabinet Assembly Instruction W0930-W1530 W0936-W1536

Step 7 : Install rainbow bracket. Screw the rainbow bracket to the side panel(B) and front frame(A) and also screw the L-shape bracket to the front frame(A) and top panel(C).

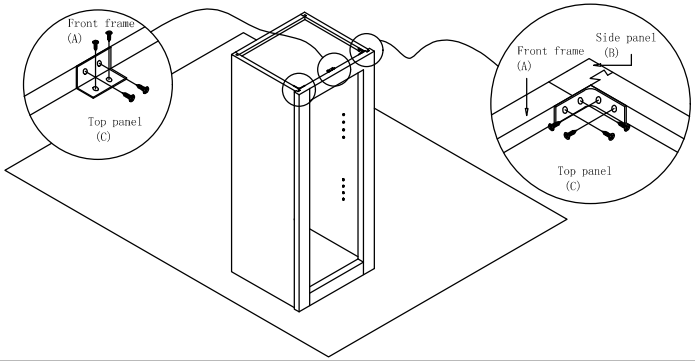

Step 8 : Install shelf clips. Install shelf clip to the side panel (B).

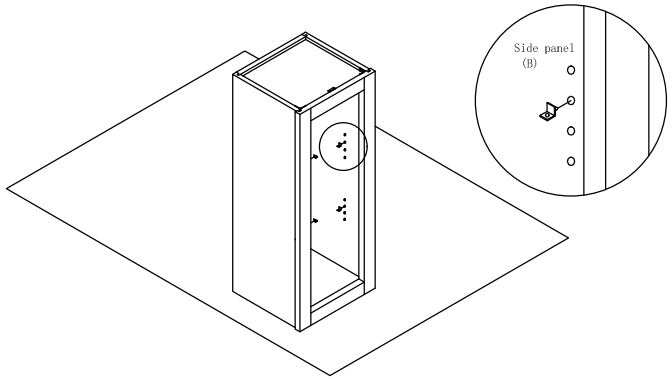

Step 9 : Install adjustable shelf. Put adjustable shelf (E) to the shelf clip.

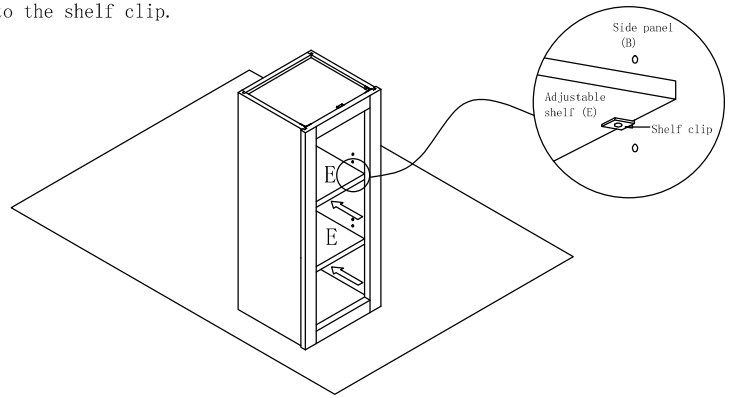

Step 10 : Install door. Screw the hinge to the door (F) and front frame (A).

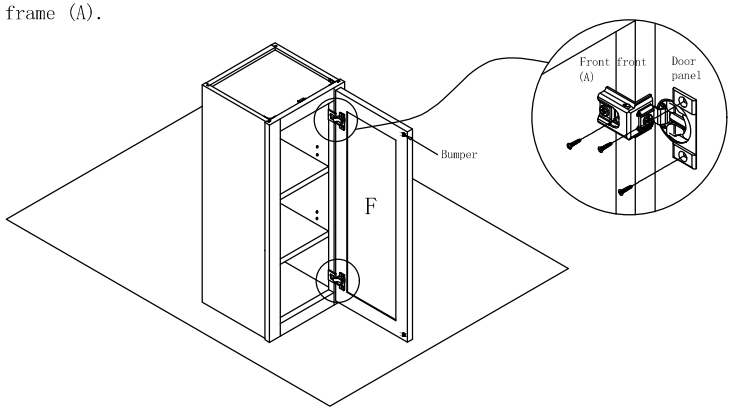
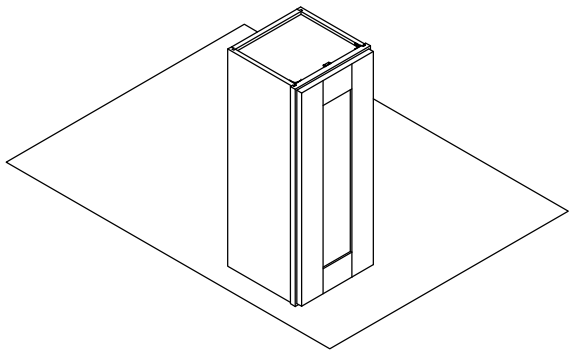
Step 11 : Finish installation of cabinet.